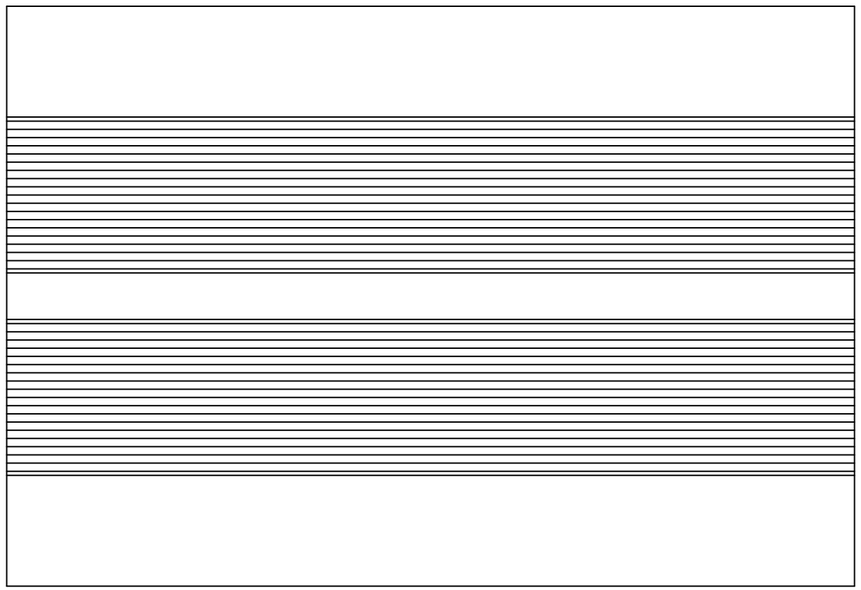

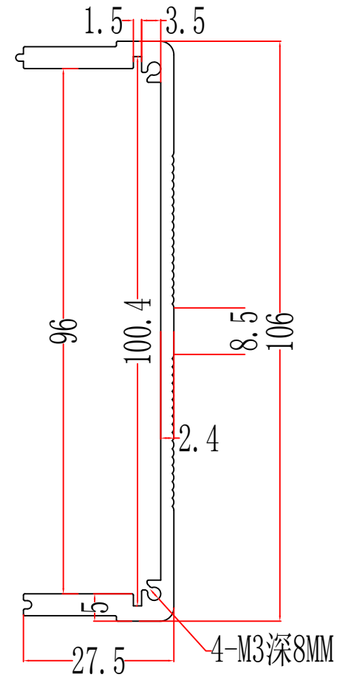

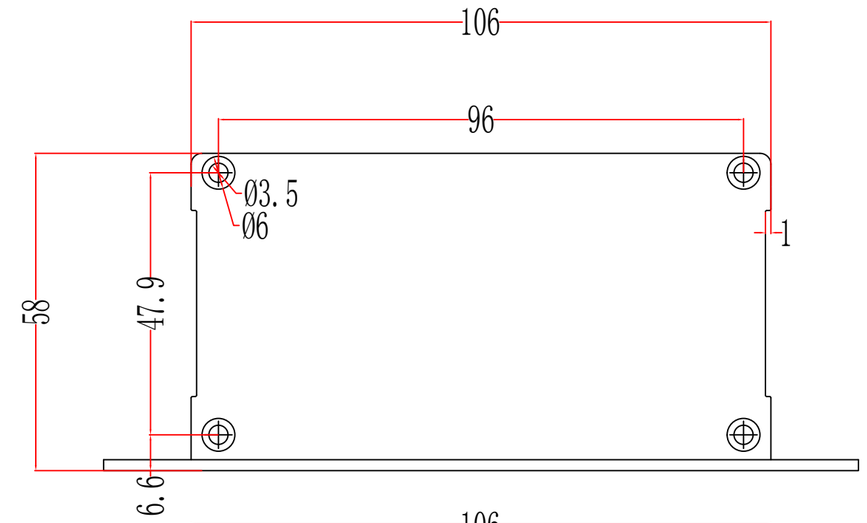

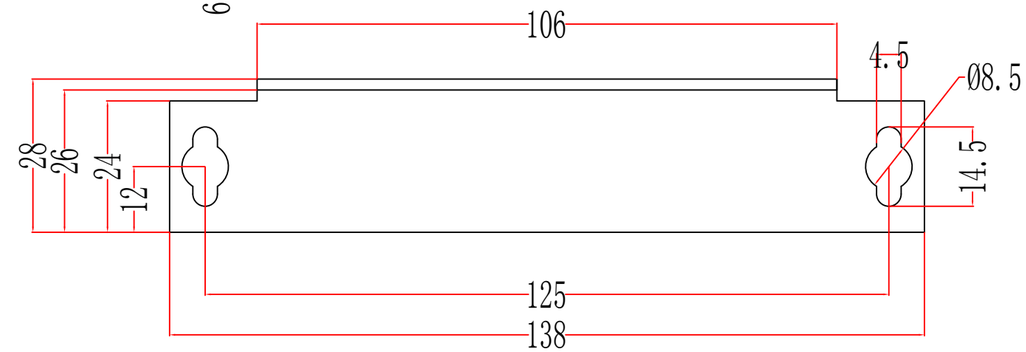

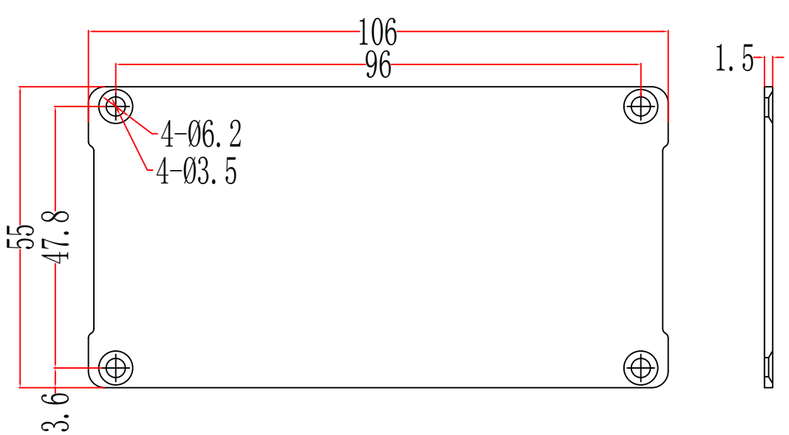

Part No: ABL422-A2

www.ariaebox.com